living b.p.c.
bonprix collection

974684

FSC
www.fsc.org
100%
Wood from well-managed forests
FSC® C111196

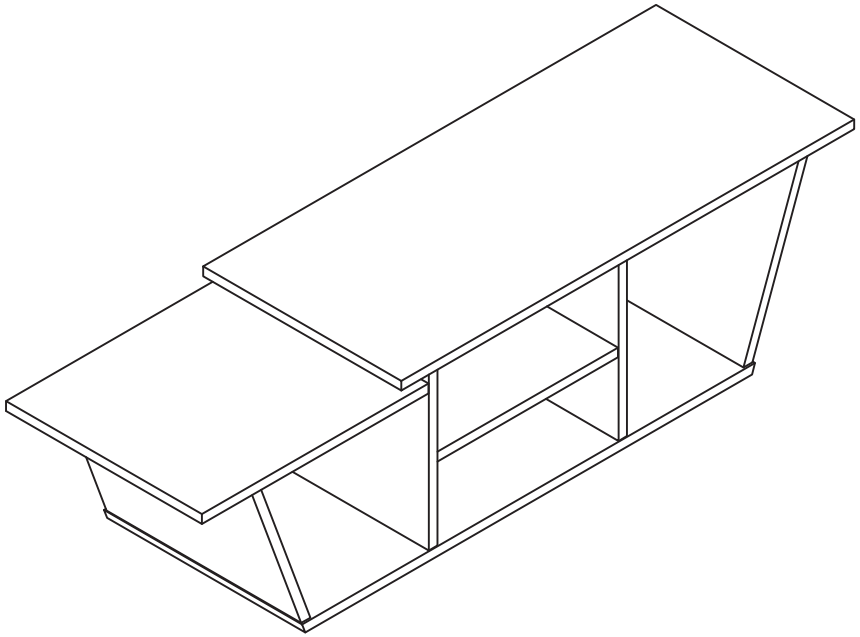

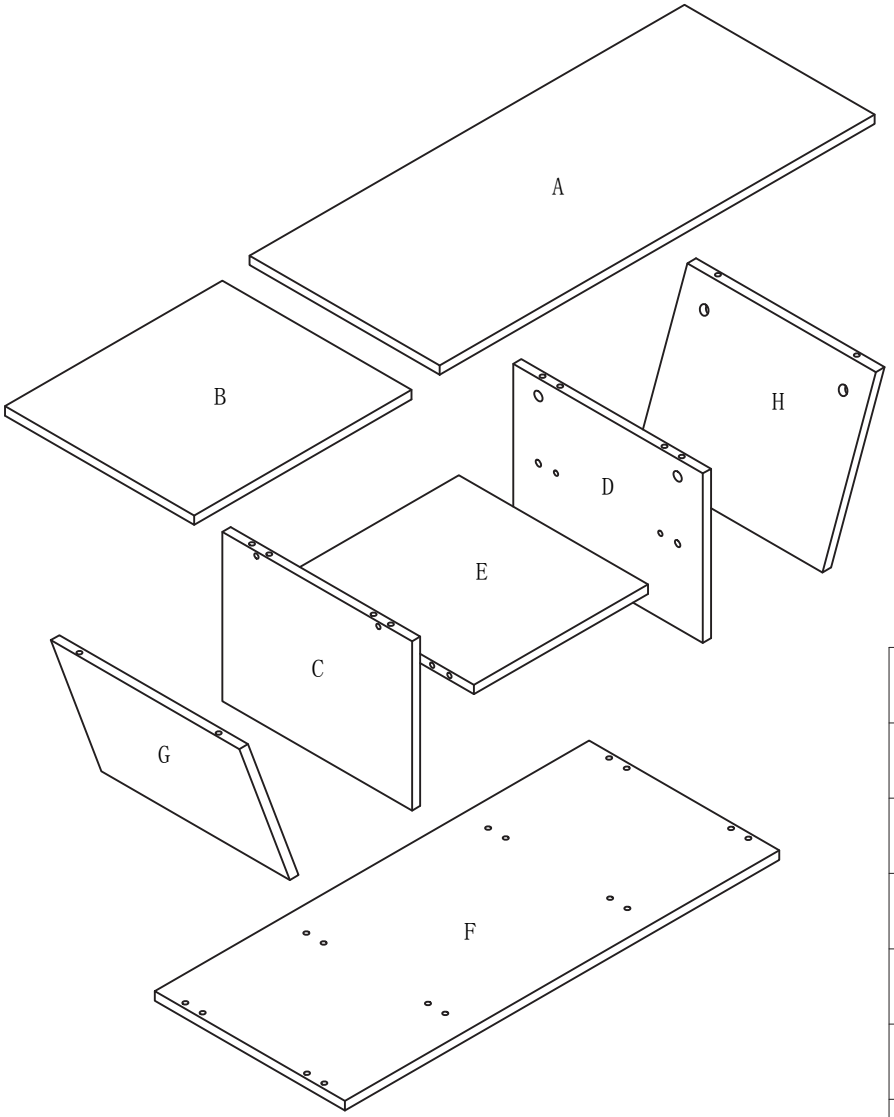

A	X	1
B	X	1
C	X	1
D	X	1
E	X	1
F	X	1
G	X	1
H	X	1

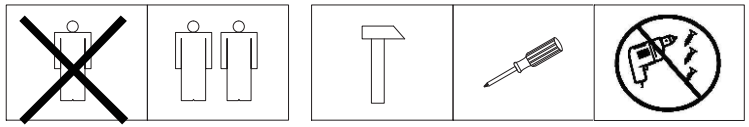

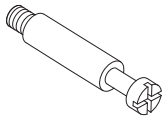	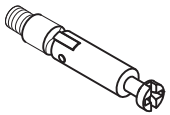		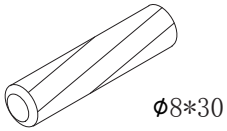	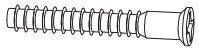	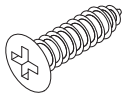
a X 8	b X 4	c X 12	d X 16	e X 10	f X 8

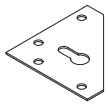	
g X 2	h X 10

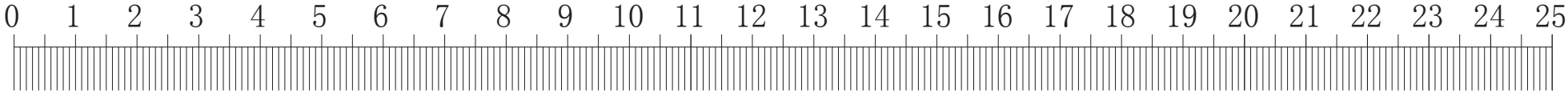

a X 4	b X 4

1

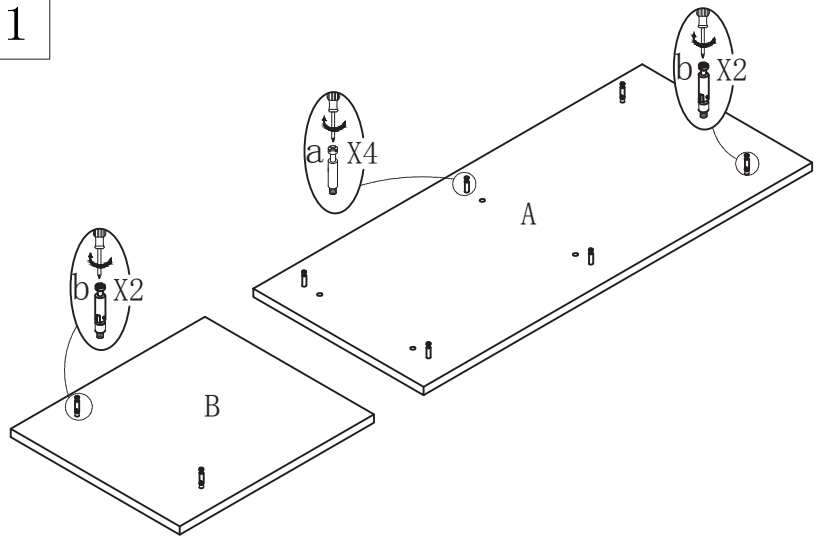

a X 4	d X 12

2

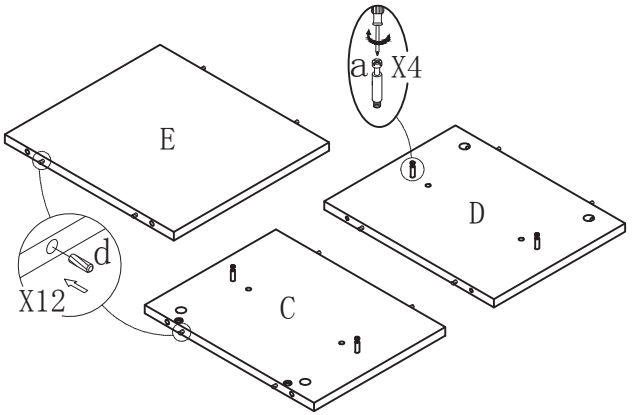

e X 2

3

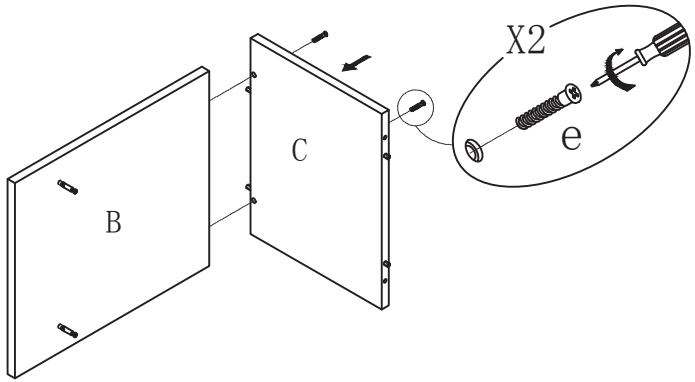

c X 4

4

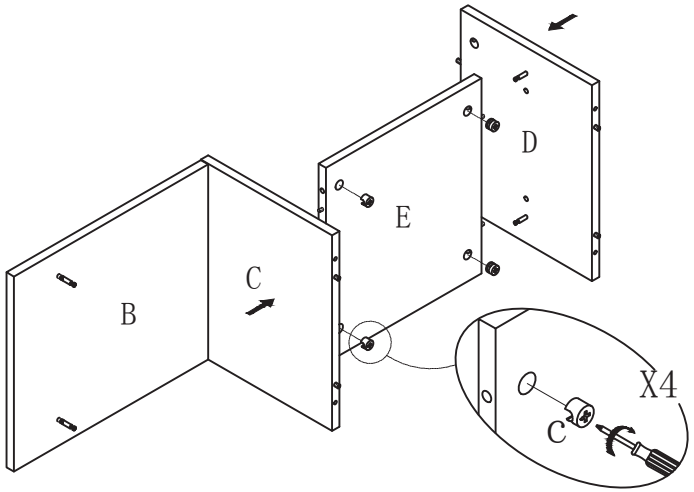

c X 4

5

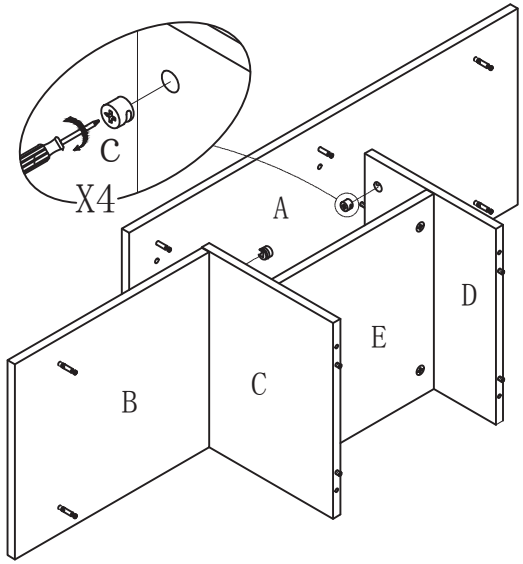

c X 2

7

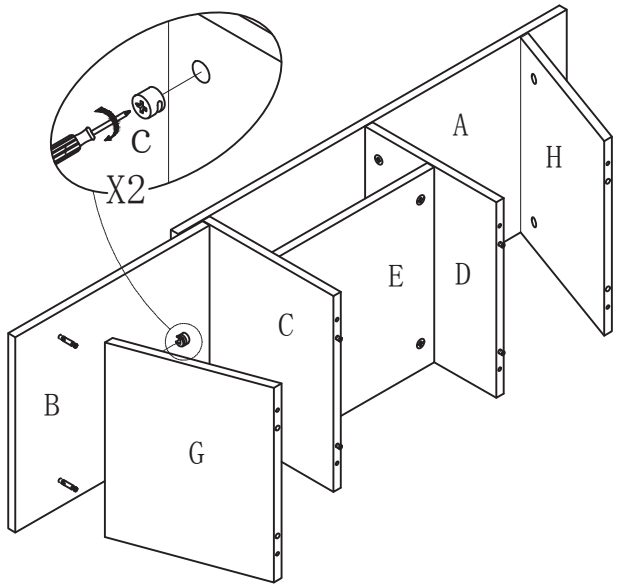

c X 2

6

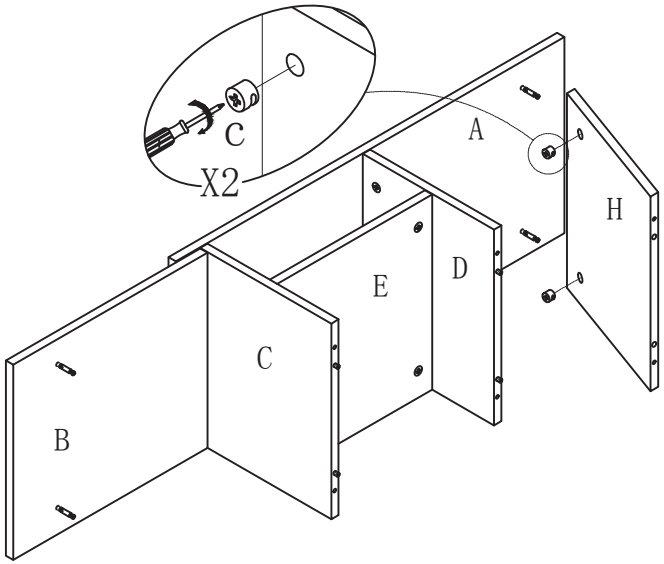

d X 4

8

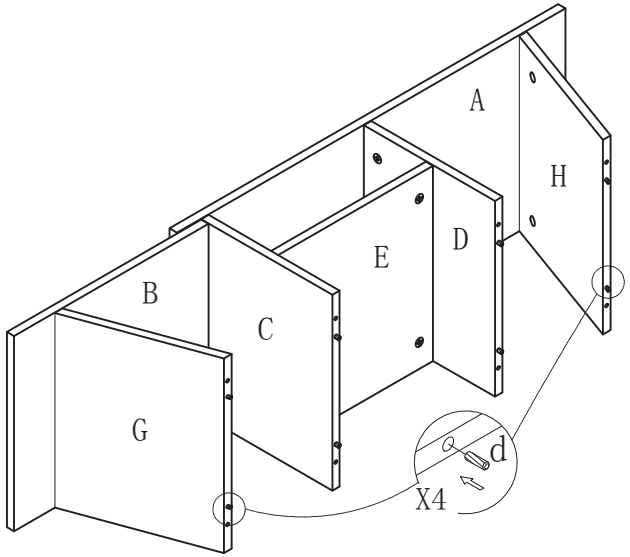

e X 8

9

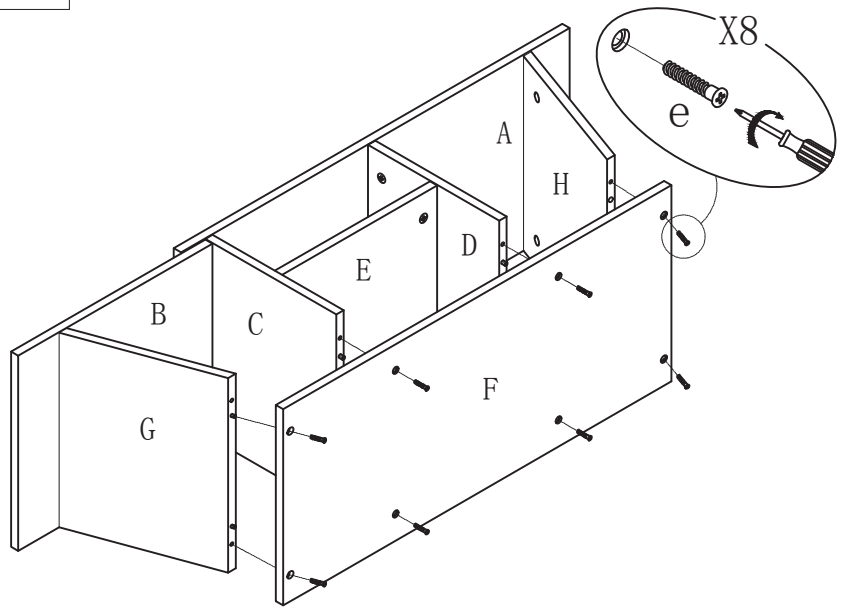

h X 10

10

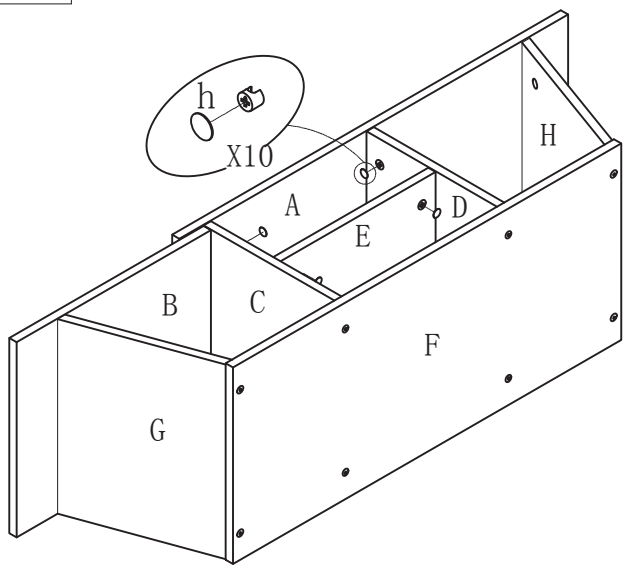

f X 8

g X 2

11

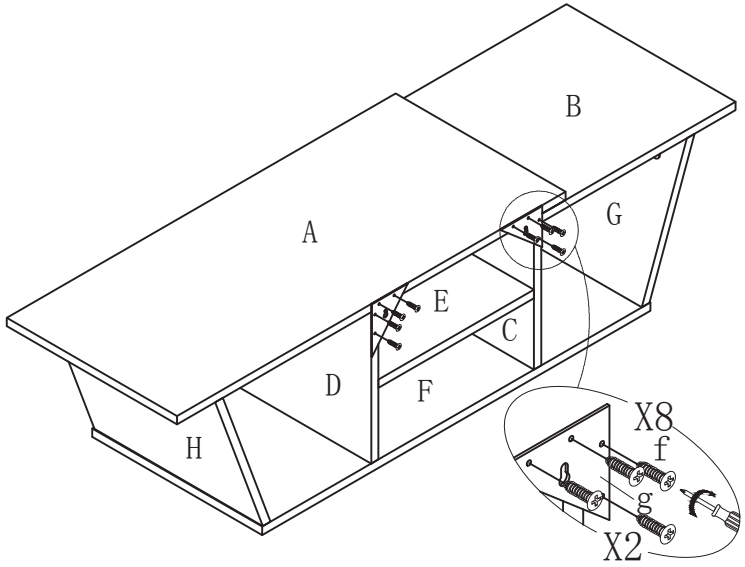
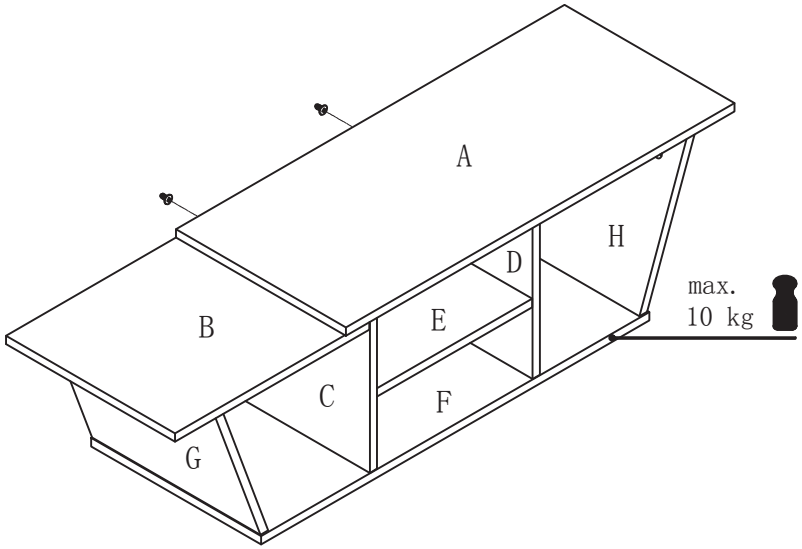
12