Width	≤90CM	≥100CM
A	1	1
B	2	3
C	1	1
D	1	1
E	1	1
F	2	2
G	2	2
H	1	1

1

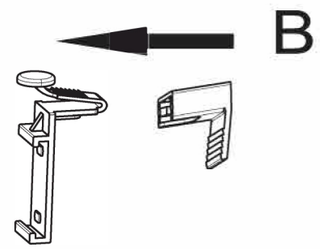

2

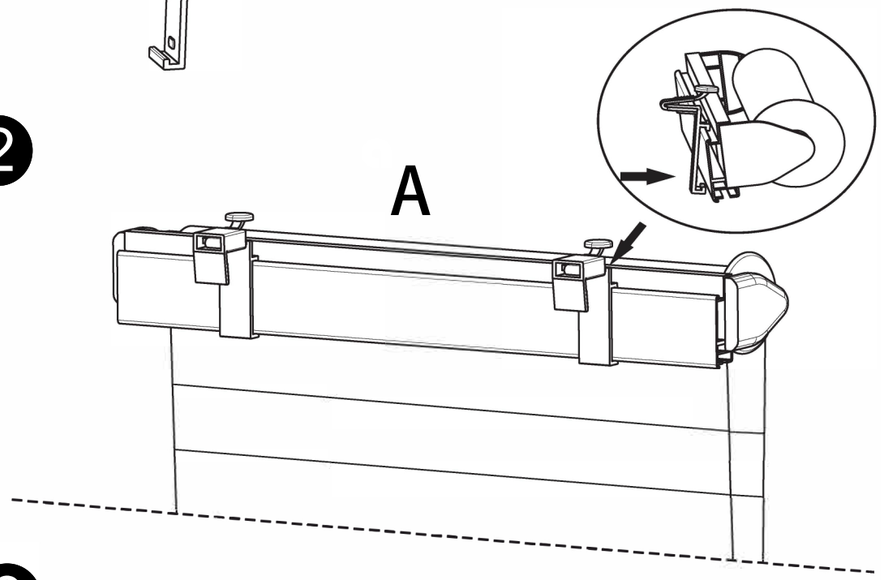

3

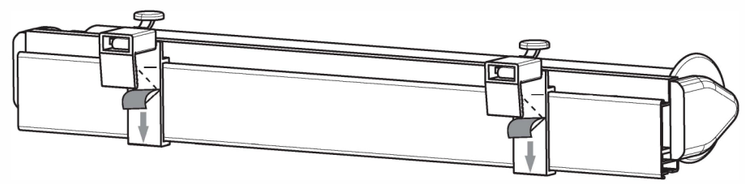

4

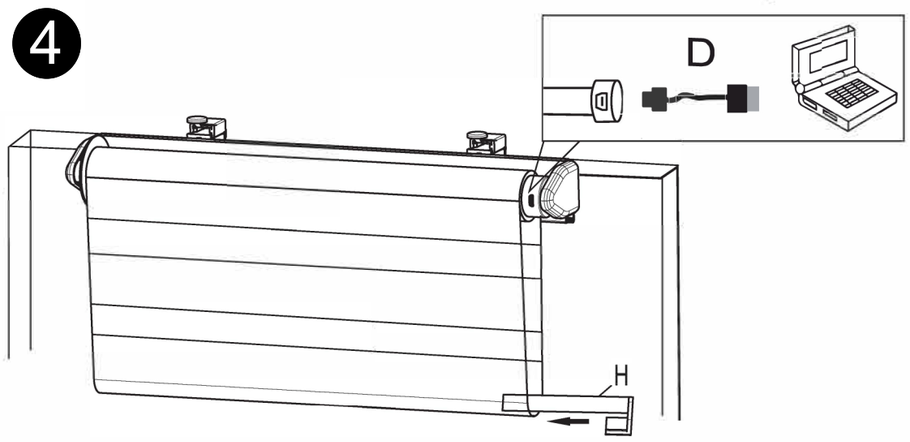

5

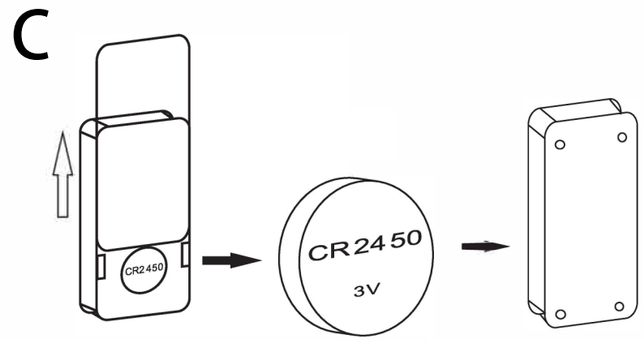

6

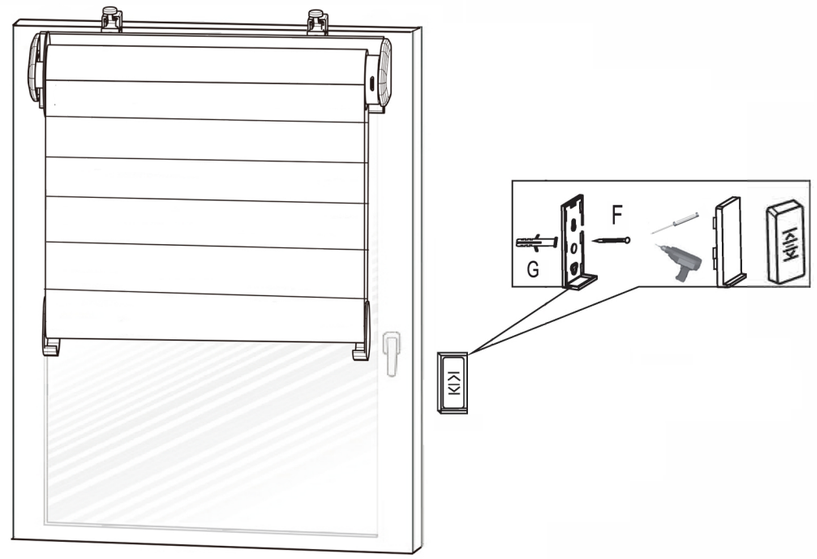
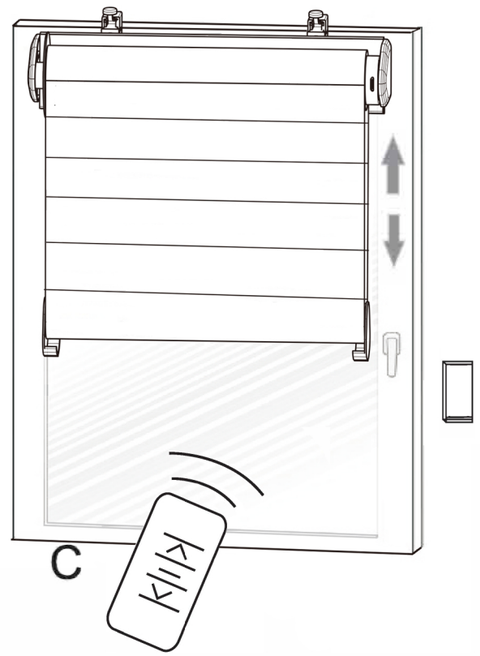
7